WIRING DIAGRAMS

Fig. 12: Check Module, Anti-Theft Sys, OBC (Grid 44-47)

1992 BMW 735i

For DIAKOM-AUTO http://www.diakom.ru Taganrog support@diakom.ru (8634)315187
Copyright © 1998 Mitchell Repair Information Company, LLC
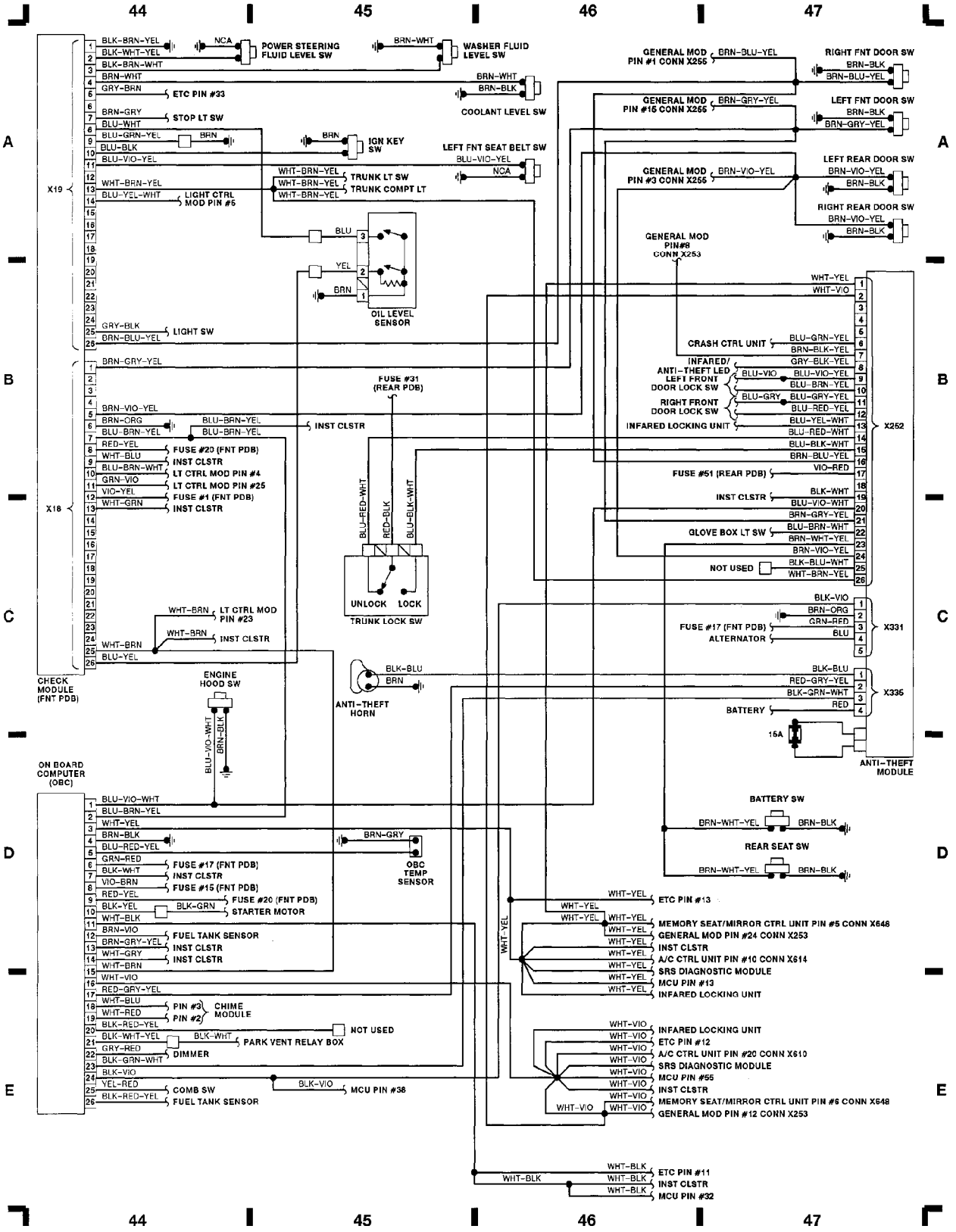
Tuesday, November 21, 2000 01:17PM