WIRING DIAGRAMS
Fig. 4: Fuse Block Front (Cont.)
1988 BMW 735i
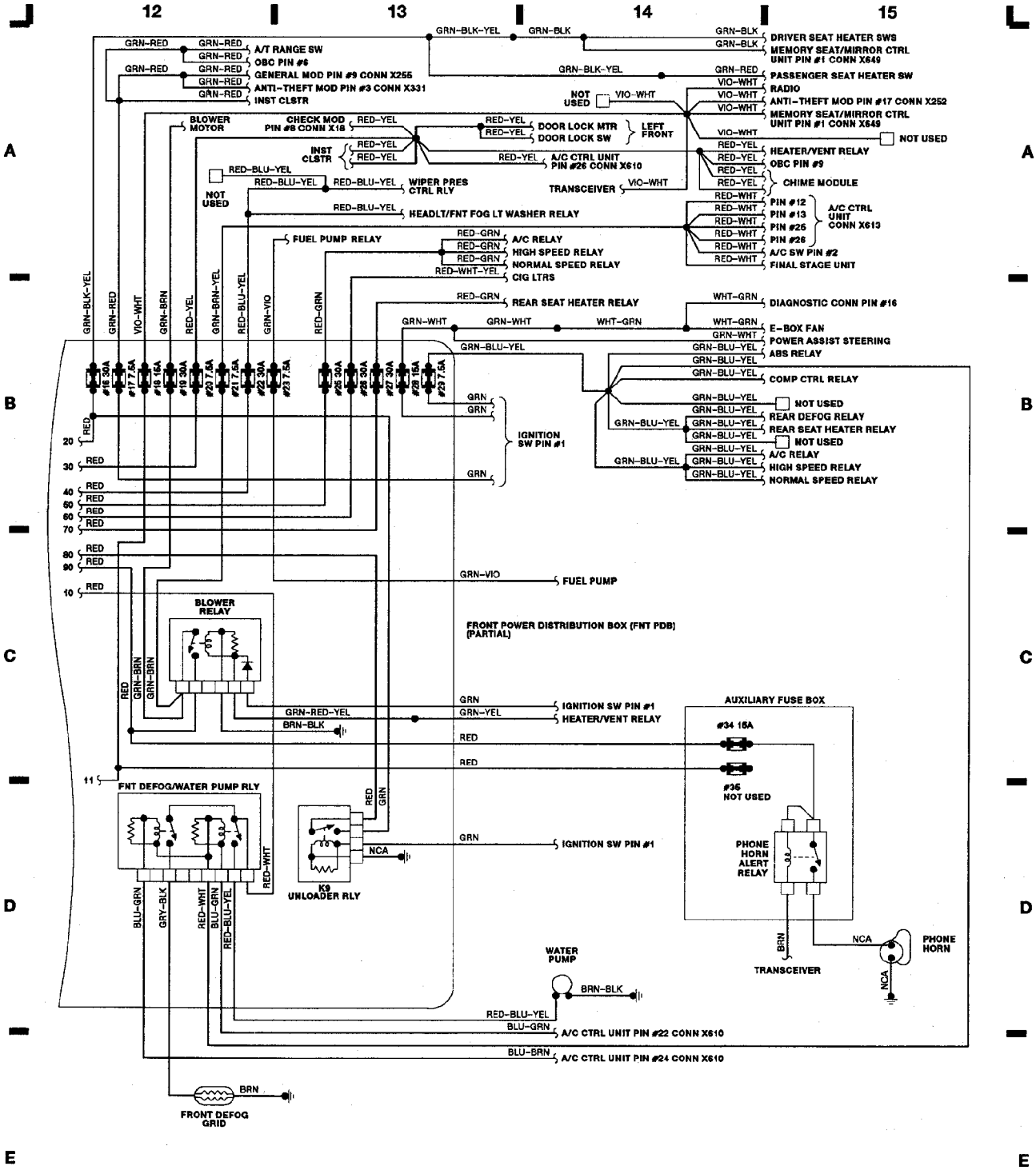
For DIAKOM-AUTO http://www.diakom.ru Taganrog support@diakom.ru (8634)315187
Copyright © 1998 Mitchell Repair Information Company, LLC
Friday, November 03, 2000 05:01PM