WIRING DIAGRAMS
Fig. 1: Engine Compartment
1988 BMW 735i

For DIAKOM-AUTO http://www.diakom.ru Taganrog support@diakom.ru (8634)315187
Copyright © 1998 Mitchell Repair Information Company, LLC
Friday, November 03, 2000 05:01PM

COMPONENT LOCATOR:

A/C CTRL UNIT	C 28-31
A/C RELAY	D 32
A/C SW	A-E 34-35
A/T RANGE SW	C-D 51
ABS CTRL UNIT	A-B 20
ABS HYDRAULIC UNIT	A-C 23
ABS RELAY	A 23
ALTERNATOR	D 3
ANTENNA AMP	A 70
ANTI-THEFT MOD	A-B 52
AUX RLY BOX	D 15
BATTERY	A 2
BLOWER MOTOR	E 30
BLOWER RELAY	C 12
CIG LTRS	E 59
CHECK CTRL MOD	A-C 44
CHIME MOD	E 56
COMB SW	C-D 36
COMP CLUTCH	D 32
COMP CTRL RLY	B 32
CRASH CTRL UNIT	E 36
CRUISE CTRL MOD	D-E 40
CRUISE CTRL SW	C-D 40
DIAGNOSTIC CONN	C 4
DIAGNOSTIC MOD (SRS)	E 47
DIMMER	B 39
DIR LIGHT RLY	D 36
DOME LT/MAP READING ASSY	D 59
DOOR LOCK SWS	C-D 52
DOOR SWS	B 47
DRIVERS MEMORY SEAT ADJ SWITCH	A 60-62
DRIVERS SEAT HEATER SW	B 66-67
DRIVERS THIGH SUPPORT SW	B 60
E-BOX FAN	A 16
EDC CTRL UNIT	C-D 23
EDC SW	E 23
ETC	C-E 20
FINAL STAGE UNIT	E 29
FLASHLIGHT CHARGING PLUG	D 57
FNT DEFOG/WATER PUMP RLY	D 12
FNT PWR DISTRIBUTION BOX (FNT PDB)	B-D 8-13
FNT PWR WDO SW	A-C 56
FNT SEAT HEATER SWS	B 66-67
FOG LT SW	B 36
FOOTWELL LTS	C-D 56
FUEL PUMP	E 4
FUEL PUMP RLY	D 4
GENERAL MOD	A-E 55
GLOVE BOX LT	D 56
HAZARD SW	B-C 36
HAZARD FLASHER RLY	D-E 36
HEADLT/FNT DEFOG LT MOD	A-B 40
HEATER/VENT RLY	A-B 33
HIGH SPEED RLY	E 32
HORN RELAY	C 11
IGNITION COIL	B 7
IGNITION SW	D-E 8
INST CLSTR	A-E 48-49
K3 UNLOADER RLY	C 11
K9 UNLOADER RLY	D 13
LEFT REAR SEAT POSTN/HTR RLY	D 64
LIGHT CTRL MODULE	D-E 39
LIGHT SW	A-B 36
LOCK MOTORS	E 52-55
MAIN RELAY	C 7
MEMORY SEAT/MIRROR CTRL UNIT	D 60-63
MEMORY SEAT/MIRROR SW	A 63
MIRROR CTRL SW	D 68
MOTRONIC CTRL UNIT (MCU)	A 4-7
NORMAL SPEED RELAY	D 33-34
ON BOARD COMPUTER (OBC)	C-E 44
PARK LIGHT RLY	B-C 39
PASS THIGH SUPPORT SW	A 66-67
POWER ASSIST STERRING SERVOTRONIC	E 21-22
POWER MIRROR MOTOR	B-C 68
PROGRAM SW	D 22
PUMP RLY	B 23
REAR DEFOG RLY	D 18
REAR PWR DISTRIBUTION BOX (REAR PDB)	A-E 17-19
REAR READING LTS (RT/LEFT)	D-E 59
REAR SEAT HEATER SW	D-E 67
REAR WDO SWS	A-B 59
RELAY MODULE	B-D 24-27
RT FNT SEAT CTRL SW	A 64-66
RT REAR SEAT HTR RLY	D 64
SAFETY SW	E 46
STARTER MOTOR	C 3
STARTER RELAY	D 2
STOP LT SW	C 38
SUNROOF POSTN SW	A 68
TEMP DISTRIBUTION POT	E 30
THROTTLE SW	E 7
TRANSCEIVER	E 68
TRUNK COMP LT	D 70
TRUNK LT SW	E 70
TRUNK MOTOR	E 55
TRUNK LOCK SW	A 54
UNDERHOOD LIGHT	E 3
VANITY MIRROR LT	B-C 70
VALVE RELAY	B 23
WASHER JET HTR	A-B 42
WASHER PUMP RLY	B 43
WATER VALVE ASSY	A 32
WINDOW LIMIT SWS	A 57
WINDOW MOTORS	B-C 59
WIPER MOTOR	D-E 41
WIPER PRES CTRL MTR	A 41
WIPER PRES CTRL RLY	A-B 43
WIPER RELAY	D 41
WIPER/WASHER SW	D-E 43

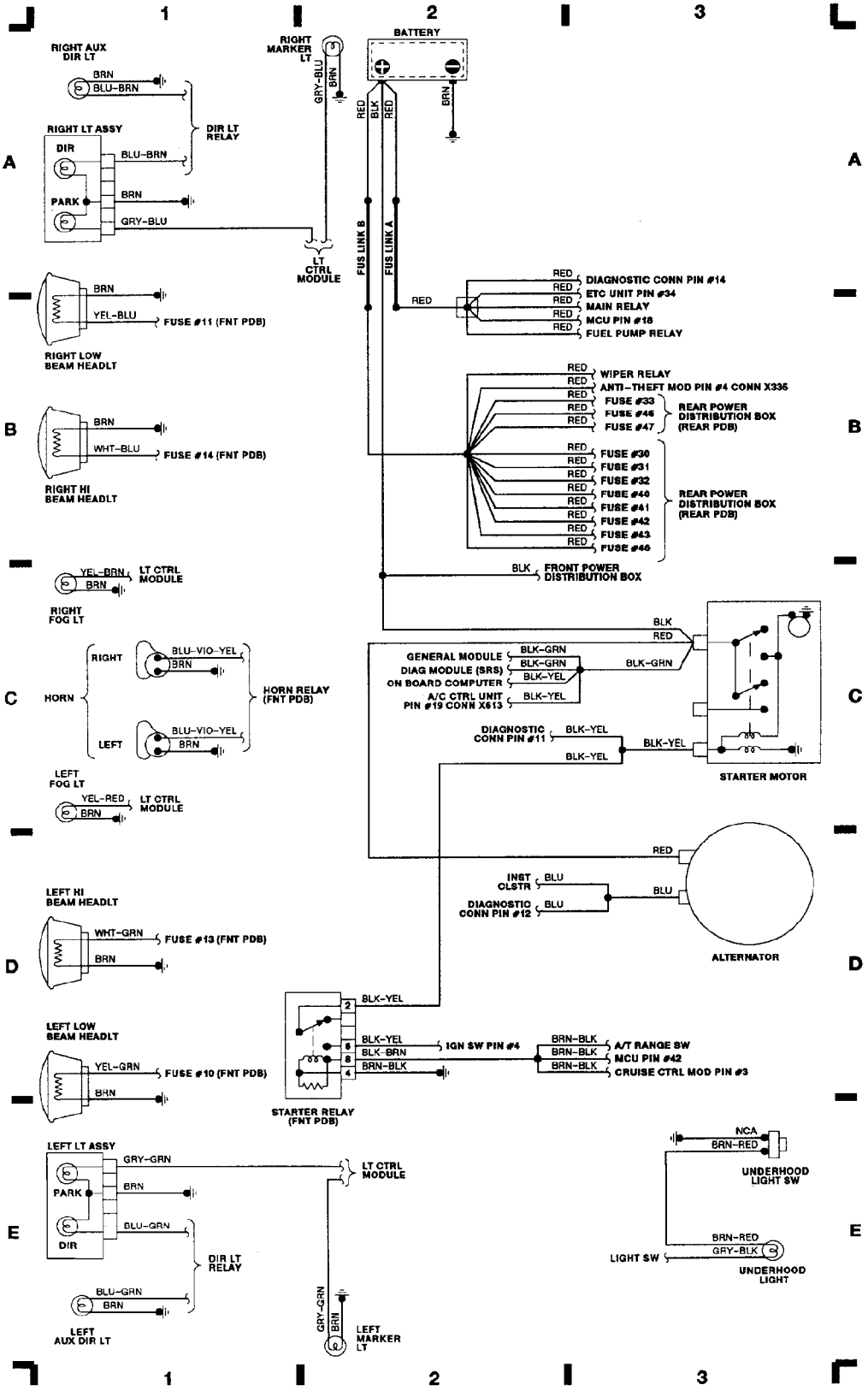

102237